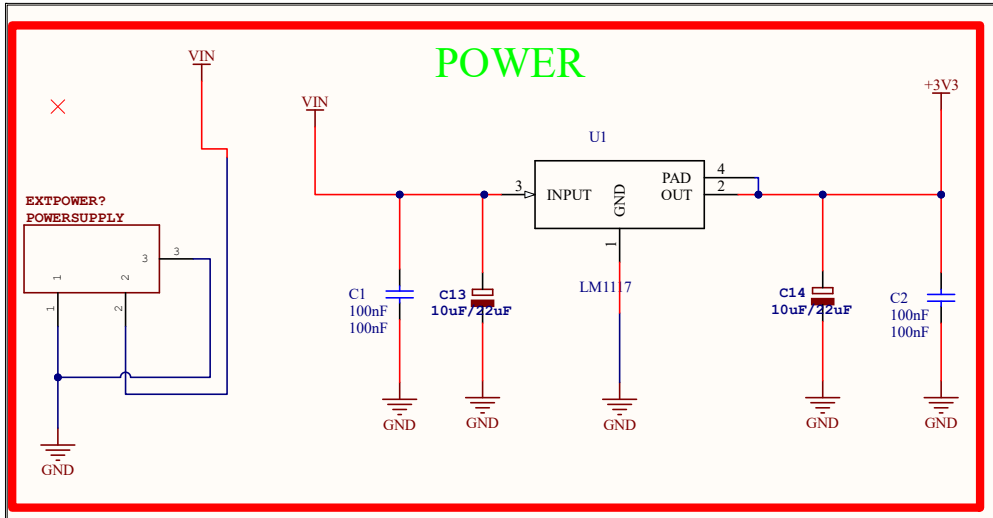

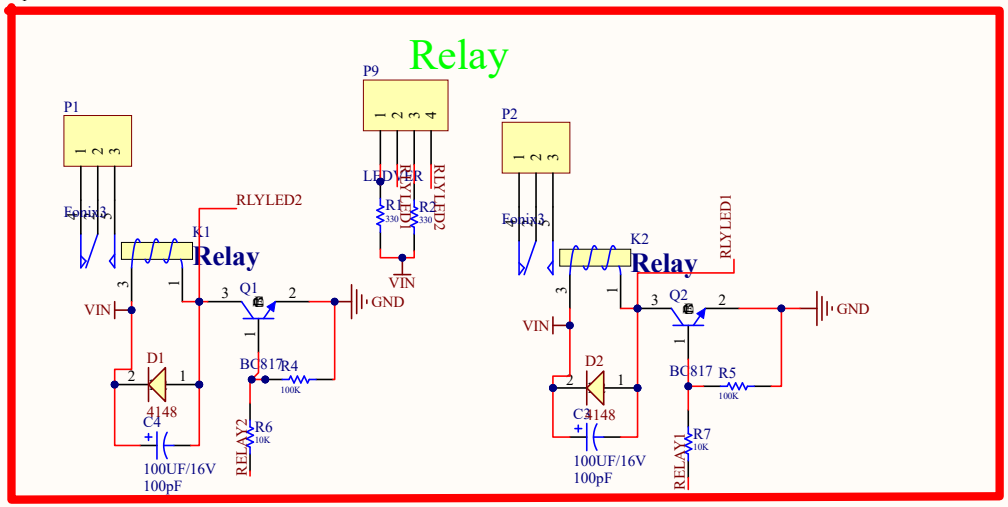

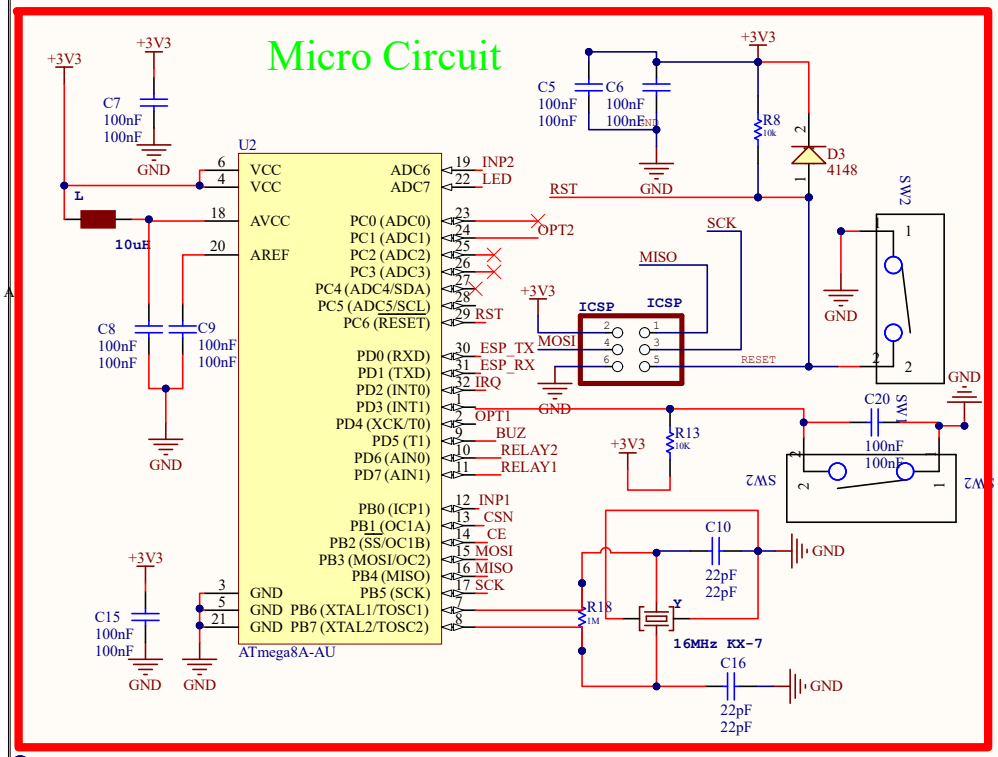

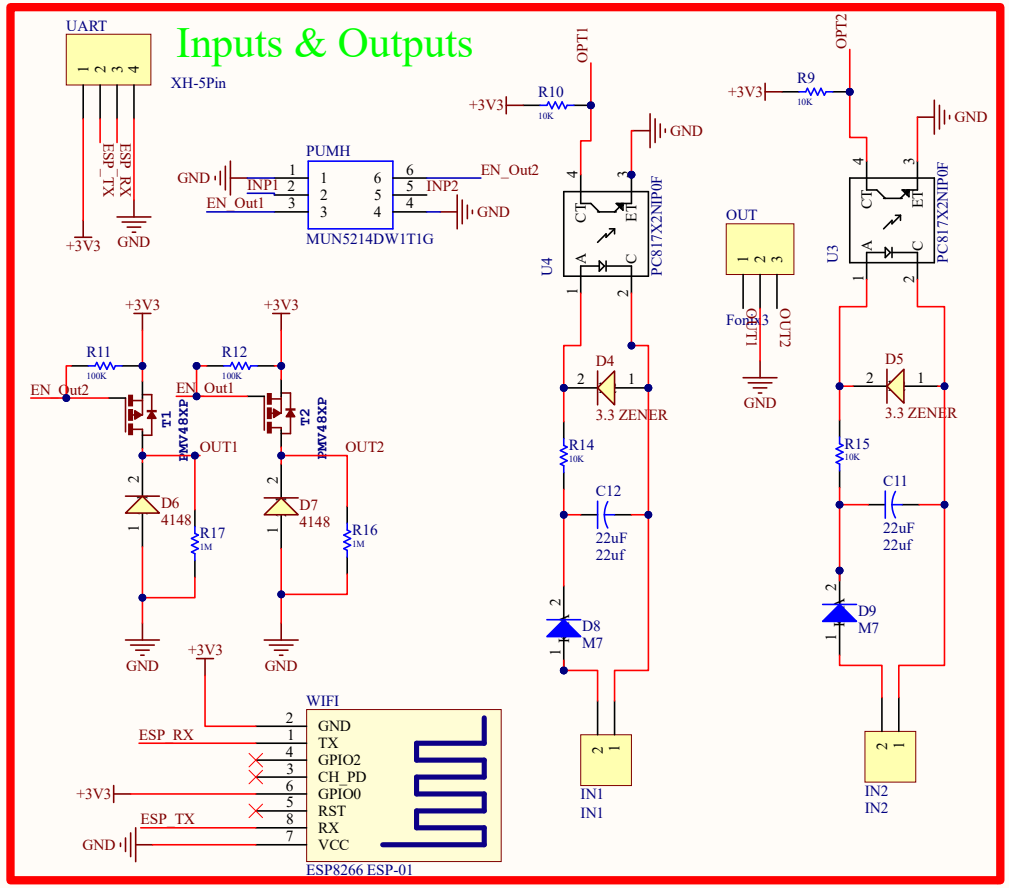

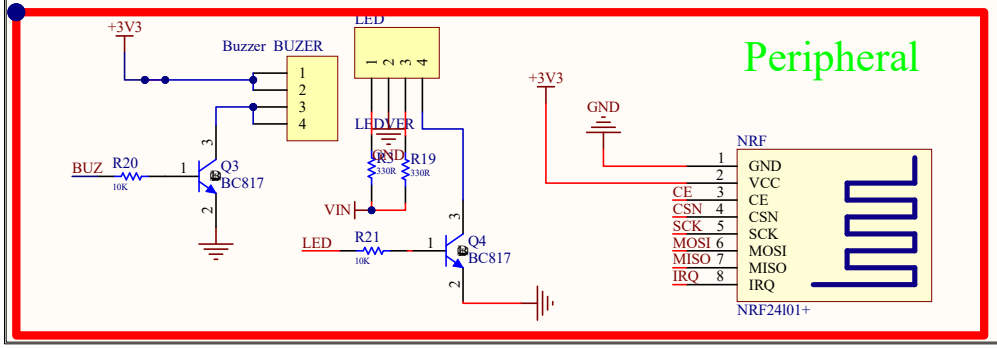

Title		
Size B	Number	Revision
Date: 10/01/2025	Sheet of	
File: D:\ZeinaIlsAbsent\..\Remote_Project_Edition24B.SchDoc	Drawn By: 96	